Extending DTN into Earth

A Survey of System Implementations and Application Domains

Dr Artemios G. Voyiatzis, Industrial Systems Institute/RC 'Athena'
Visiting Researcher, SPICE

Outline

- Disruption- and Delay-Tolerant Networking
- Implementations
- Testing and verification
- System and applications
- R&D outlook

Internet architecture

- End-to-end, bidirectional path
  - Between any two nodes in the network
- Relatively short round-trip times
  - Usually milliseconds, sometimes seconds, rarely minutes
- Symmetric data rates
  - Same order of magnitude
- Low error rates
  - Corruption rate 1:5.000 (Paxson, 1997)
- Sustain operation even when nodes disappear
  - Break in small packets, forward as fast as possible
  - Use alternative advertised paths in case of problem

Internet into deep space

- Deep space
  - Up to 250 **Kbps** sustainable TCP between Earth and Mars
  - Further may not be possible
  - Stack limitations (transmission timeouts), enormous round-trip times, asymmetric links, no end-to-end path always available
- Delay-Tolerant Networks (DTN)
  - Support multiple space protocols
  - Sustain operation with delays beyond protocol capabilities
  - Receive and store variable-size information
  - Forward, when next hop becomes available (days?)
  - In-network storage

DTN architecture and beyond

- IETF DTNRG (2002)
- RFC 4838 (2007)
  - DTN architecture
  - Bundle layer: end-to-end message-oriented overlay above transport
- RFC 5050 (2007)
  - Bundle Protocol v6
- RFC 6257 (2011)
  - Bundle Security Protocol

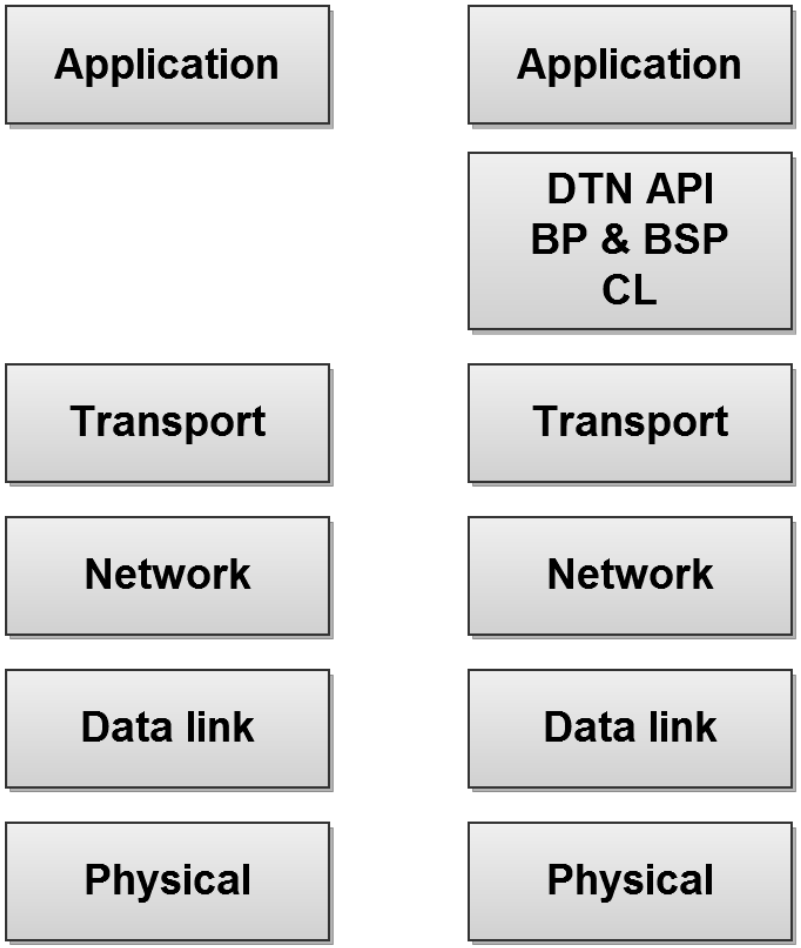

DTN: The quest for a problem (?)

- Disruption and delay is the norm
  - Volume of data
  - Mobility
- No end-to-end connectivity
  - Environmental
  - Policy
- Non-IP environments
  - Sensors and industrial networks
- Resource scarcity
  - Lack of infrastructure
  - Occasional crowds
- Green and sustainable
  - Optimize, do not overprovision
  - Solve once, apply many

Implementations

7

Early DTN implementations

- DTN-RI by Trinity College Dublin
  - Pre-RFC 5050
  - Developed in C++
  - Support Linux, Solaris, Win32 (cygwin), Linux on PDA (ARM), FreeBSD, Mac OS X.
- DTN1
  - Prototype implementation in C
  - Tested on x386 and StrongARM Linux
  - No longer in active development
- BP-RI v1.0.1
  - Based on Java
  - Compatible with (old) Bundle Protocol v4 Internet Draft

DTN2 reference implementation

- RFC 5050 reference implementation, written in C++
- Tested on Linux (x64 and 64-bit x86), Mac OS X (PPC and x386)
- Open source, hosted on SourceForge
- Support TBR, Bonjour, Prophet, DTLSR, and flooding routing
- Extensible XML interface for routing
  - RAPID in Java, HSBD in C++
- Convergence layer: TCP, UDP, NORM, AX.25, and Bluetooth
- Extensible XML interface for new layers
  - Underwater Convergence Layer
- External link with Licklider Transmission Protocol (LTP)

ION: A space-oriented implementation

- Spawned by work at JPL for IPN
- Written in C
- Implements Bundle Protocol, LTP CL, CCSDS protocols, and Contact Graph Routing (CGR)
- Tested on Linux, Mac OS X, FreeBSD, Solaris, RTEMS, and VxWorks
- Supports TCP, UDP, and LTP
- Interoperable with DTN2
- Previously a somehow restricted license (Open Channel Software/Caltech, OCS)
- Starting with version 2.5, hosted on SourceForge under BSD license
- Version 3.0 contains work by SPICE too ☺

IBR-DTN for OpenWRT routers

- Institut fur Betriedsysteme und Rechnerverbund, TU Braunschweig
- Very portable, slim, and extensible implementation in C++
- Tested on Linux (x386 and MIPS)
- Runs on embedded systems (wireless AP):
  - Microtik Routerboard 532
  - Netgear WGT634U
  - Linksys WRT54G3G
  - FON-2200

- CL: support for TCP, UDP, and HTTP
- Routing: Table-based; TCP and UDP discovery; IP neighbor, and epidemic routing

DTN on smartphones

- Portable, personal, multiple connectivity options
  - 3G, WiFi, Bluetooth, USB, …
- Bytewalla in Java for Android (KTH, Sweden)
- JavaDTN ported to Windows and Linux (University of Wisconsin)
- DASM for Symbian phones (HUT, Finland)
  - Tested on Nokia Communicator 9300i and 9500
- DTNS60 complete rewrite for Symbian S60 (Aalto, Finland)
  - Tested on Maemo-based Nokia N95 and E90, DT-Talkie on N800 and N810
- IBR-DTN port on OpenMoko platform (NEO FreeRunner)
- Objective-C implementation for iPhone reported but not available

Wireless sensor networks

- A WSN can be a “region” in DTN terminology
- DTNLite (UCB, USA)
  - Reliable transfer on sensor networks
  - Based on TinyOS platform, demonstrated on Mica motes
  - Not an RFC 5050 implementation (constrained environment)
- ContikiDTN for Contiki-based sensors (SICS, Sweden)
  - Interoperate with DTN2 on PC with TCP CL
- IBR-DTN port on hacked iMote2 sensor running OpenEmbedded Linux
  - Support only IEEE 802.15.4 (LowPAN) as a CL

Other implementations

- POSTELLATION for embedded systems
  - Written in C for embedded systems
  - Runs on Windows, Mac OS X, Linux, and RTEMS
  - Supports TCP, UDP, and TCP-TLS CL over IPv4 and IPv6
  - Available under license
- RDTN based on Ruby
  - No support for CL
- pyDTN simulator
  - Based on Python and C++, developed by University of Maryland

Simulation and emulation

15

Simulators

- Simulators
  - NS2
  - OMNET++
  - DTNsim (remote village and city bus)
  - ONE *(superior but lacks of support for low-level protocols)*
- VDTNsim
  - Extends ONE for vehicular DTN
- Tools
  - DTNperf_2: performance testing, similar to Iperf2
  - Wireshark Bundle Protocol decoder over TCP and UDP (also LTP)
  - dtnbone: worldwide collection of DTN nodes and applications
  - *DTNtg traffic generator*

Testbeds

VDTN@Lab

- Laptops and Lego Mindstorms NXT with Asus PDA phone P527

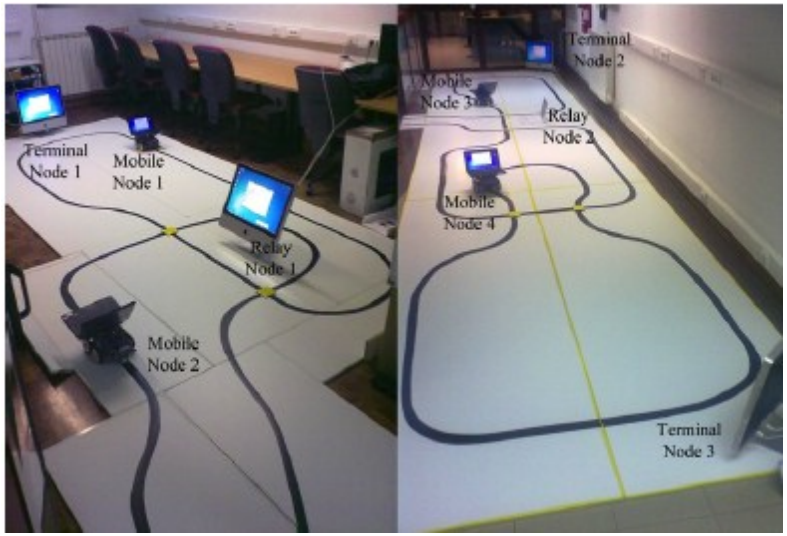

DOME

- DieselNet in urban areas
- Moving objects on schedules routes (buses)

More testbeds

UTMesh

- Agricultural monitoring
- PEAR (non-DTN) testing
- 3.000 lines of C

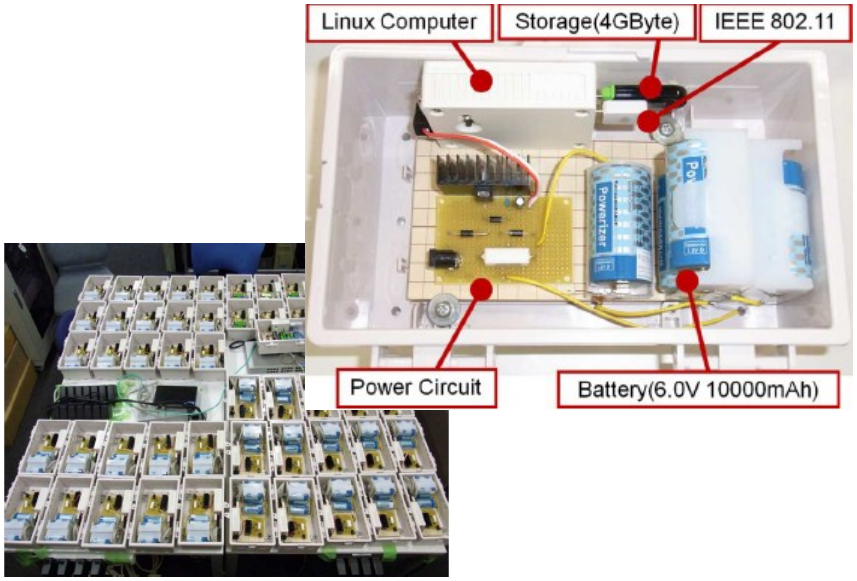

Space

- SPICE testbed ☺
- TATPA (now UCIT)
- ESA GSTVi
- xLUNA (RTEMS+UML)

Performance

19

Performance issues

- Size and capabilities
  - ION on ISS GGBA: 1.5 MB
  - IBR-DTN: 114 KB
  - DTN2: 22 MB (!) but decreased to 2.6 MB in DISCOS project.
- Storage can be a bottleneck
  - Disk-based vs. memory-based performance (IBR-DTN)
  - Small vs. large bundles (bundle frequency, processing-limited)
  - Cannot saturate a 480 Mbps link (5-500 KB bundles)
  - SD storage even worse
  - High-end machine: 940/600/450
  - DTN2 2.8.0 can be even worse

More performance issues

- IBR-DTN over IEEE 802.15.4 convergence layer
  - Maximum packet size: 128 bytes
  - Maximum payload: 115 bytes
  - Maximum bundle protocol payload size: 40 bytes
  - Experiment on iMote2: 4.6 Kbps instead of 250 Kbps
- Effect of security processing
  - Bandwidth
  - Energy
  - Implementation-specific (experiments with BouncyCastle)
- Interaction with convergence layers
  - Bundle size, block size, fragmentation, environment …
  - NORM (NACK-oriented Reliable Multicast, RFC 5740) outperforms TCP on AX.25 links.

Terrestrial applications

22

Military applications

- Airborne networks
  - Dynamic nature of topology
- Naval networks
  - Multiple types of networks
  - DTN as a unifying layer
- CONDOR for Marine Corps
  - DTN2 software ported on a CISCO IDS module (SBC)
  - Cisco 3752 router
  - Support for Space Communication Protocol Standard Transport Protocol (SCPS-TP) ad DTN-enabled web proxy
- Underwater communications
  - Acoustic signals of 1.500 m/sec
  - DTN2 external convergence layer (UCL) based on XML messaging
  - Field test by NURC and University of Porto in Italy (September 2010)
  - DTN merging two different networks (acoustic and RF)

Connectivity in developing areas

- Human-oriented communications
- DakNet for rural areas in Cambodia and India
  - Bus, motorcycle, bicycle as a “data mule”
- KioskNet
  - Pilot deployment and prototype re-design
- Teleconsultation services in Ghana
  - Transmission of high-bandwidth, non-real-time information
  - Utilize Diaspora professionals

Disconnected areas

- Padjelenta national park in Laponia, Sweden
  - UNESCO World Heritage site
- Saami Nework Connectivity (SNC) and N4C
  - Basic Internet services to the herders
- ExtremeComm
  - Infrastructure setups in Indian Himalayan
- Chromium mines in Finland
  - Pilot DTN demonstration using ALIX.3D boards and mobile phones

Environment and wildlife monitoring

- ZebraNet
  - Social behavior and movement of zebras in Kenya (2004)
  - Hardware design for long-term unmonitored operations
- Lake pollution monitoring in Ireland
  - Use boats as mules
  - Cost-effective compared to cellular transmission
- LUSTER in Eastern Shore Virginia
  - SenQ at sensor node layer
  - DTN as storage layer (802.15.4 and 802.11) for nearby TinyOS sensors
  - Back-end server detects missing values and queries for them
- EMMA @ Braunschweig
  - Cost-efficient, large-scale urban environment monitoring
  - Public transportation
- MANA in North-East Greenland
  - Sensor network for year-round lake monitoring
  - Harsh conditions and impossible maintenance

Vehicular DTN

- New: Bundle Layer under IP
- New: separate data and control plane
  - Signaling messages for node type and speed, physical link rate and range, energy constraints, storage constraints, …
- Control plane on Bluetooth, data plane on WiFi
- Works only under UDP
- Similar work: IP-over-DTN
  - Asynchronous communication
  - Carry up to 1.500 bytes
  - Use IP-to-DTN mapping (like ARP)
  - Prototype implementation using PEAR (potential-based entropy adaptive routing)

Traffic engineering

- TrainNet
  - Racks of portable hard disks in trains and stations
  - Transport latency-insensitive information
- Air carriers and airports
  - Reachability problem; flight schedule among all cities
- NetStitcher
  - Bulk transfers between dispersed datacenters
  - Predict future bandwidth availability among datacenters
  - Simulations and live deployment on a CDN: 5x bandwidth savings

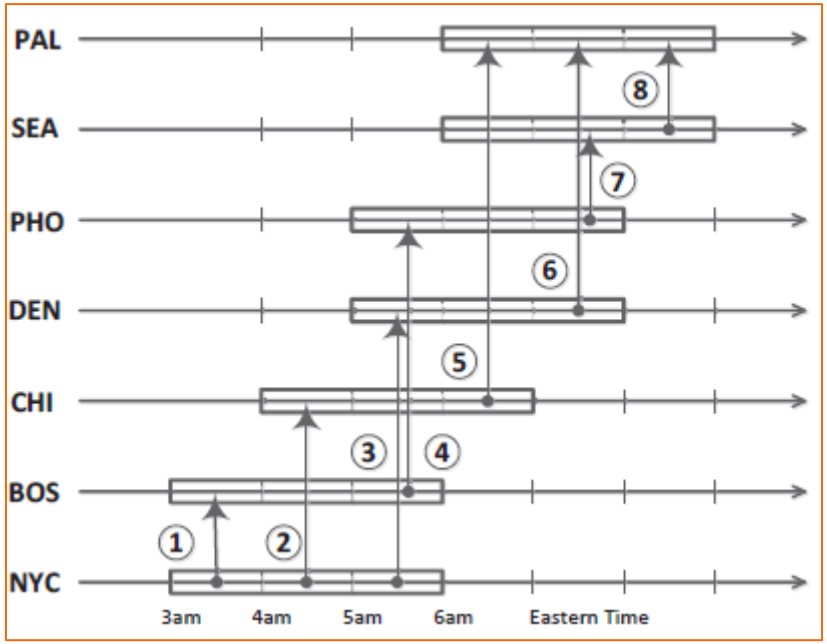

Urban areas

- DieselNet in Amherst, MA
  - 40 buses around campus (DOME)
- Content sharing and distribution to commuters
  - Also, accessing Twitter and web search from a bus
- User Provided Networks (UPN)
  - DTN approach in providing upload bandwidth for passing-by people
- BikeNet
  - Collect information for routes and rides
  - Dual-link routing
- Smart caching
  - High-speed video streaming over episodic connections in highways
- Maritime communication environments
  - WiMax-based maritime mesh network; cheaper than satellite
  - No energy constraints; limited by sea conditions
  - Range of 35 km for ship-to-base and 20 km for ship-to-ship
  - DTN routing (epidemic and spray-and-wait) achieve better packet delivery ratio

Emergency relief operations

- DTN can interface multiple networks
  - Space, satellite, underwater, HTTP, UDP/IP, AX.25, …
- Infrastructure may not be available
- DTN over AX.25 allow more ad hoc, self-configuring network formation necessary on an emergency
- Situational awareness with help of volunteers
  - Redundant information
  - Missing information
  - Security and privacy concerns on device sharing
  - Information integrity

Outlook

31

Research problems looking for a solution

Research

- Control plane
  - Link and routes; storage and congestion; time and network management.
- BP and header processing
  - Reliability and performance
  - Alternative stacks
- Resource sharing
  - Policies, security, and privacy
- Transmit-delay tradeoffs
  - Network capacity, energy

Development

- Systems
  - Bundle layer firewall
  - High-speed DTN
  - Efficient routing
  - Port beyond Linux
- Tools
  - BSP decoder
  - BSP interoperability
  - Bundle injector
  - Performance evaluation

Applications looking for a DTN solution

- Large areas-expensive always on
  - Social sensors
  - Remote telemetry (e.g. agriculture)
  - Ships and maritime
  - E-learning
- Network outages
  - Emergency response
  - Crowds
  - Smart cache and streaming
  - ICTD
- Bridges
  - Industrial networks (incl. health and sensors)

Thank you!